MAXFAX

Journal of the D. C. Maxecuters

... home of the dreaded POTOMAC PURSUIT SQUADRON of the Flying Aces

Editor: Stew Meyers NOV/DEC 2004

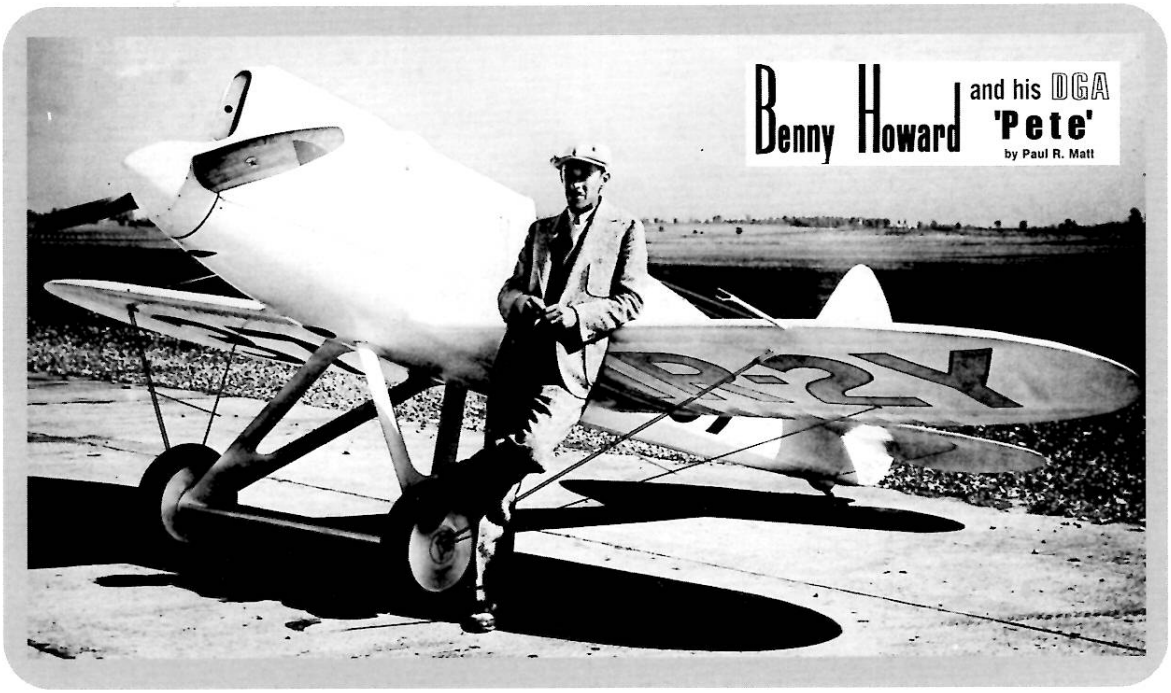

COMING ATTRACTIONS

NATIONAL BUILDING MUSEUM FLYING

10am time for people on list, general public allowed in 11am

Sunday Jan. 30, 2005 10am to 4pm Freeflight and Radio Control (Note date change)
Check inside newsletter for more information and new Helicopter event

Sunday Mar. 6, 2005 10am to 4pm Freeflight and Radio Control

IMPORTANT Email Dan Driscoll to have your name on the list for entry and parking.
email to: djdriscoll@cox.net

NBM Delta Dart Cub Scout Training Sessions
10am to 1pm and 2pm to 5pm on all dates
VOLUNTEER INSTRUCTORS WARMLY WELCOMED FOR ALL TRAINING SESSIONS

Saturday Jan. 8, 2005 (Note date change)

Saturday Feb. 12, 2005

Saturday Mar. 19, 2005

JANUARY 9, 2004 SAM COLLECTO REGION 11

FALLS CHURCH, VA - Sunday, January 9, 2005 - Noon to 4 PM
Meeting room of the Tysons-Pimmit Regional Library 7584 Leesburg Pike, Falls Church, VA 22043 Your hosts will be Jim Coffin (703~256-3865) and Marty Schindler (703-938-2975.)

Photo by David Mitchell

Photo From Lindsey Smith

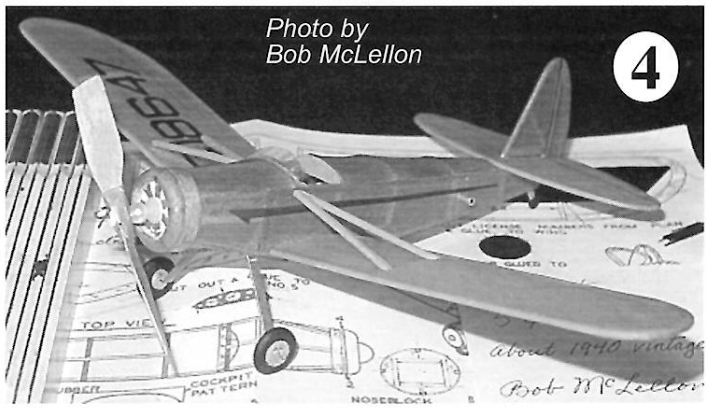

Photo by Bob McLellon

Photo from SAM

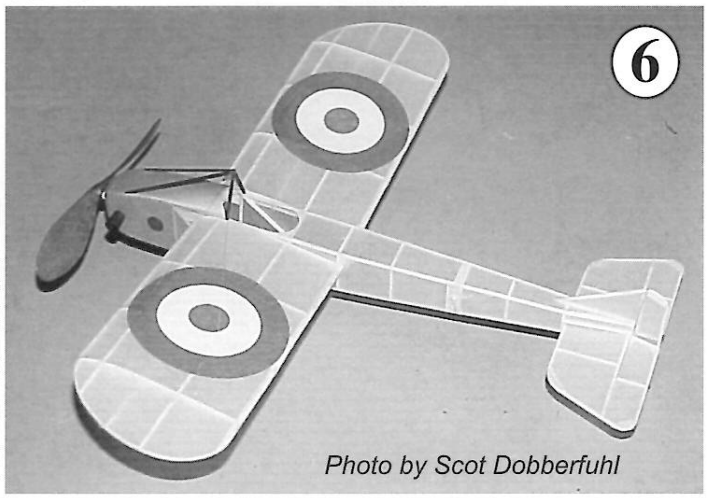

Photo by Scot Dobberfuhl

Photo by John Hunton

Photo from Jerry Paisley

MAXFAX Nov.-Dec. 2004

Stew Meyers and Dan Driscoll

In this issue we sadly note the passing of two of the Maxecuters more active members – Bert Phillips and Ed Zapolski. See page 22. and the back covers for more. Our condolences to the families of both. .....*As we readied this issue for the printer Hurst Bowers passed away more on him in the next issue.*

We have several plans – a peanut Howard "Pete" by our own Dave Mitchell; another Scientific Hi-Flyer, the Kawasaki Fighter, that you won't find anywhere else; and another Veron Tru-Flite, the Hawker Fury.

We also have the latest on our flying at the National Building Museum (NBM) and graphs showing rubber properties.

PHOTO CAPTIONS Page 2

1. David Mitchell's 'Pete', a featured PEANUT plan in this MAXFAX.
2. Our new Secretary David Mitchell with his latest, an Avenger based on the Guillow kit design.
3. Lindsey Smith with his seaplane 'Ebennezer', powered by a Cox 01 Glow.
4. A Comet 5-center Security Sport by Bob McLellon. Remember our Comet 5-center contests years ago?
5. Mike Moskow's SAM 2004 Concors-winning Rearwin Speedster, a beautiful job using the Burd Plan as modified by Doug McHard
6. From Scot Dobberfuhl way out in Oregon, a 'Bat' from Al Backstrom plans in the FAC newsletter -- should be a great flyer at 8.8 grams.
7. A Gloster Gladiator waiting for takeoff at sunrise. This one an R/C electric by John Hunton from plans derived from Doug McHard's free flight in a collaborative effort by Mike Dale, Don Srull and John. John may have some laser cut kits remaining. Contact John by email at --- johnh66@Juno.com
8. The Brainbusters really turned out for their 'Cloud Tramp' flyoff this year. See how many flyers you can recognize -- some clues -- Jerry Paisley, Earl Stahl and Jane McLellon are in the front row on the right side of the photo.

Peanut "Pete"

Dave Mitchell

The Howard "Pete" has long been one of my favorite aircraft. Nice proportions, classic lines, simple but elegant. Designed and built by Benny Howard in 1930, it was powered by a four-cylinder Wright Gypsy motor and had a top speed of 163.5 MPH. A diminutive ship, she had an empty weight of just 635 lbs. Happily, "Pete" survived her (his?) days as a racer in the thirties, has been restored, and is still flying today - a testament to the structural integrity of Howard's designs.

This has been a rewarding model. While it's no giant killer in the air, it has uncorked some surprising flights, and has shown itself to be quite versatile - I have flown it comfortably indoors within the National Building Museum and in all sorts of uncouth weather outdoors. With all the dihedral I cranked into it, it's stable as a rock, and tolerates lots of experimentation with decalage, thrust adjustments, rubber/prop combinations, etc. without losing composure. I have had a great deal of fun trying out different arrangements. My model likes to have a pretty good toss to get it up to flying speed, and once in the air you just can't beat the way it looks.

Construction is pretty straightforward; check the plans for comments. Note the landing gear attachment at the fuselage. While it looks fragile, it has absorbed a great deal of abuse, though if I were building it again I might attach the LG plate to the fuselage with a magnet rather than gluing it. I used fine monofilament for the rigging, which is attached at the landing gear by simply looping it over the head of the pin that serves as the wheel axle. On rough landings the rigging can pop off the pin, minimizing damage, so don't glue or tie it in place.

I attached the stabilizer to the fuselage only at the main spar, to allow adjustments to the decalage. Ditto the rudder. My "Pete" flies well with the typical 3 degrees right/down thrust and a 6" Peck prop. Weight without rubber is about 14g_you could do better with a bit more attention to wood selection than I gave mine. Also, I covered mine with white Esaki tissue, then airbrushed it with white acrylic model paint. Looks great, but the white paint is too heavy! Next time I will go lighter on the paint, if I use it at all. For the registration numbers, I lightly dusted white tissue with gold acrylic paint, and then used my computer to print the outlines directly on the gold tissue using an inkjet printer. I then cut them out and attached them to the model using Uhu glue stick. I never got around to making a spinner for it; lazy. Somebody one-up me here.

Paul Matt did a nice three-view of "Pete" and its history in Historical Aviation Album No. XII. The three-view is still available from the folks at Aviation Heritage (http://aviation-heritage.com/HotSec.htm).

I referred to it in the drawing of these plans. And if the "Pete" gives you goody shivers but peanuts aren't your thing, Dave Rees has a beautiful plan for a 24" version that I'm told is a great flyer. I've been so pleased with my little guy that it won't be long before I move up to Dave's version. Enjoy, and send me pictures if you build your own.

edgemitchell@mindspring.com

(Ed. Note: Aircraft was all white; registration numbers and "Pete" were gold outlined in black; racing numbers were black.)

Kawasaki Fighter

This Scientific Hi-Flyer represents the Kawasaki KDA-5, Army Type 2 Fighter, first produced in 1932. It was Kawasaki's first fighter aircraft and was heavily influenced by Western designs, especially the Curtiss P-6. A few were still in service, as trainers, when Japan entered WWII.

While not completely accurate, the model does look like the real aircraft. The color scheme shown on the plan, however, is completely fictitious. The aircraft were overall light gray with national markings of solid red circles (Hinomarus) in six positions as shown on the plans. The three-views on this page show where they go. Black numbers appear on both left and right wings.

We obtained this plan from Walt Grigg in Florida, and we've never seen one built. Hurst Bowers has one framed up. With the typical light Hi-Flyer construc-tion, it looks it may be a good flyer. Pay particular attention to the unusual interplane strut parts N and L and the tissue covered portion of the strut. This model would fit nicely into the Old-Time Kit Scale and/or Golden Age Military events.

Hawker Fury

This is a Veron Tru-Flite kit plan, and is a reasonably good representation of the Hawker Fury I. The Fury was the zenith of British biplane fighters, and was first produced in 1931. The Fury II was virtually identical except for the addition of wheel spats. Export versions of the Fury were produced for Persia, Spain, Yugoslavia, Portugal, and Norway. Fury I and II's sold to South Africa were used against Italian bombers in East Africa in 1941. Yugoslavian Furies also saw action in WWII. Spanish and Portugese Furies had the Dowety under carriage shown below.

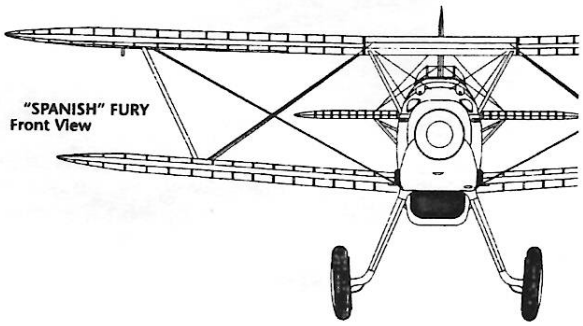

A three-view drawing of the Fury I as produced for service with three RAF fighter squadrons.

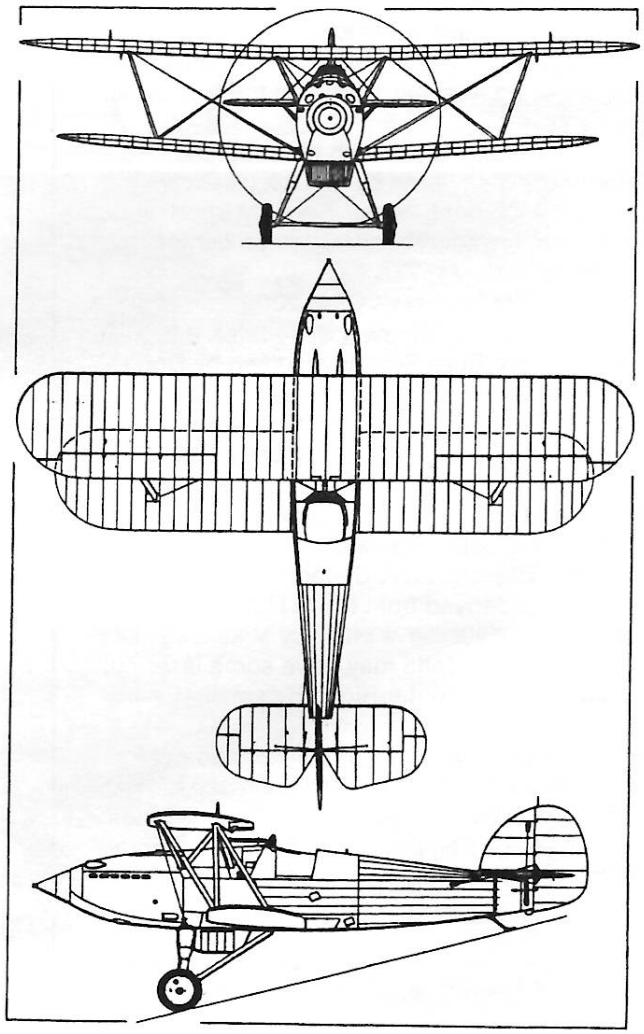

Depicted in these side views are:
(1) Yugoslav Fury JA with Hispano engine;
(2) Norwegian Fury; (3) Persian Fury with Hornet;
(4) Persian Fury with Mercury;
(5) Yugoslav Fury with Kestrel XVI;
(6) Spanish Fury with Hispano engine.

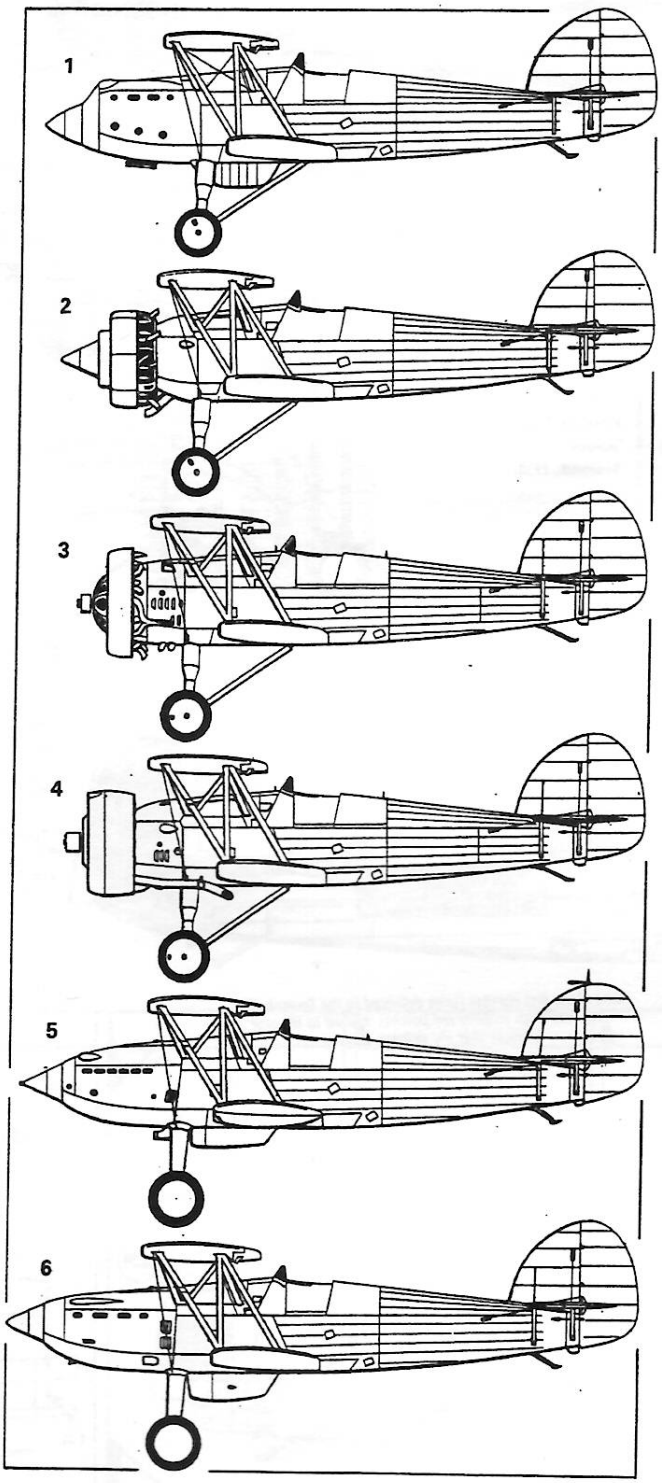

Fury K2048 shows the typical location of aircraft numbers on the bottom wing. The Squadron markings are insignia red. The flying school Fury is trainer yellow all over except for the polished aluminum fairing ahead of the cockpit. The Spanish Fury has insignia Red bars on the fuselage and wings. The tail colors are yellow and purple. The Portugese hound is yellow. Wing marking is red cross on white circle.

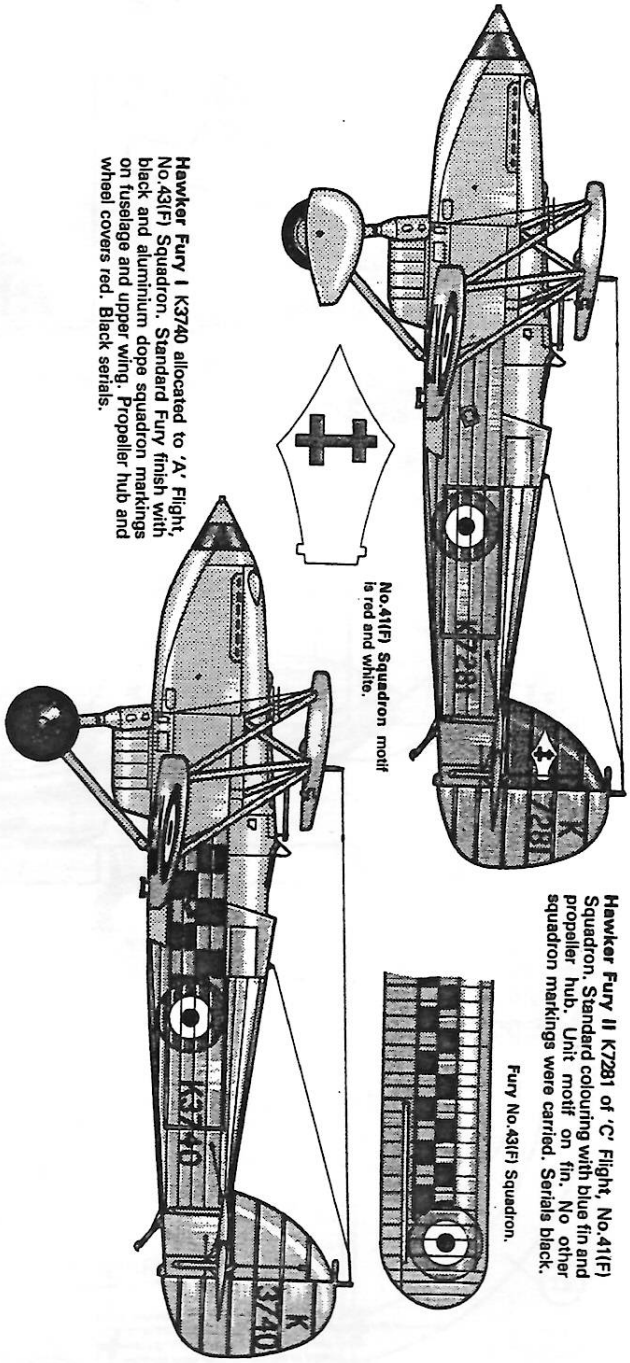

Hawker Fury II K7281 of 'C' Flight, No.41(F) Squadron. Standard colouring with blue fin and propeller hub. Unit motif on fin. No other squadron markings were carried. Serials black.

Fury No.43(F) Squadron.

No.41(F) Squadron motif is red and white.

Hawker Fury I K3740 allocated to 'A' Flight, No.43(F) Squadron. Standard Fury finish with black and aluminium dope squadron markings on fuselage and upper wing. Propeller hub and wheel covers red. Black serials.

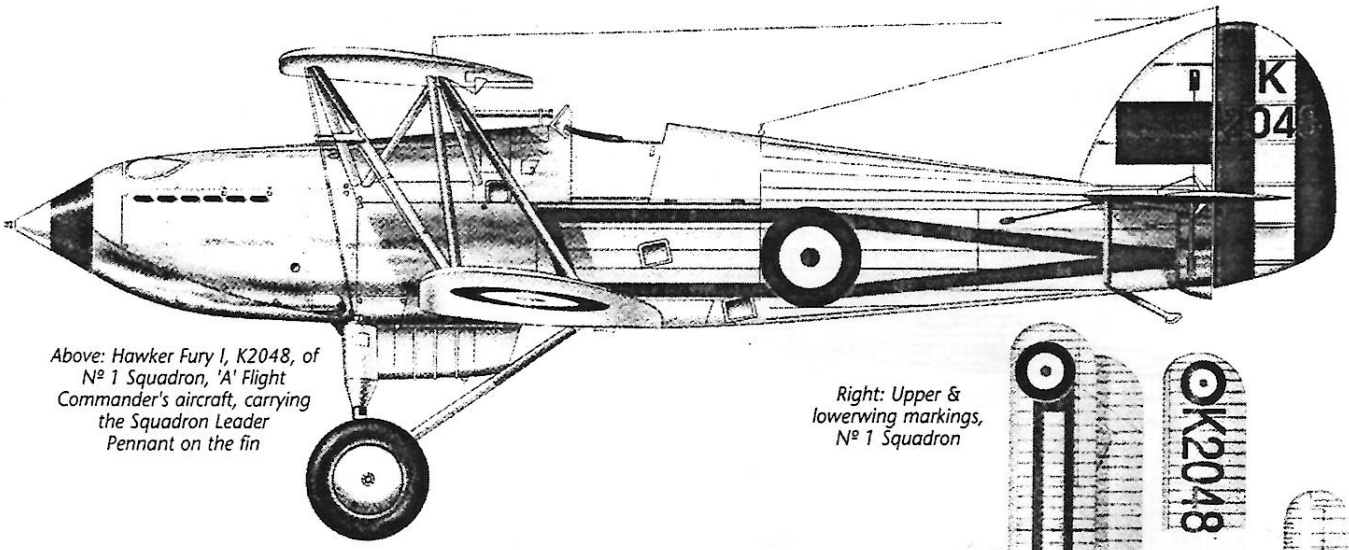

Above: Hawker Fury I, K2048, of Nº 1 Squadron, 'A' Flight Commander's aircraft, carrying the Squadron Leader Pennant on the fin

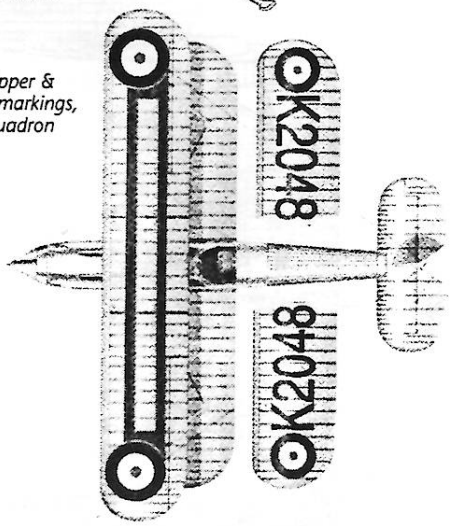

Right: Upper & lowerwing markings, Nº 1 Squadron

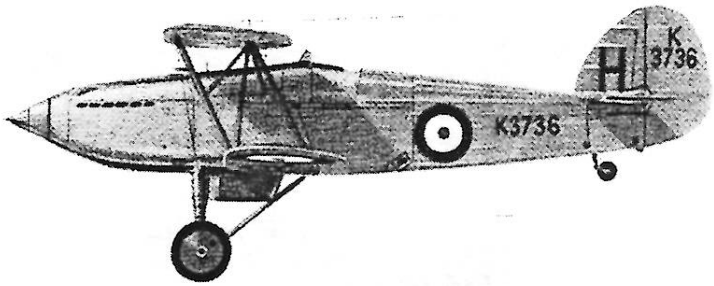

Fury I,
5 Flying Training School,
Sealand, 1938.

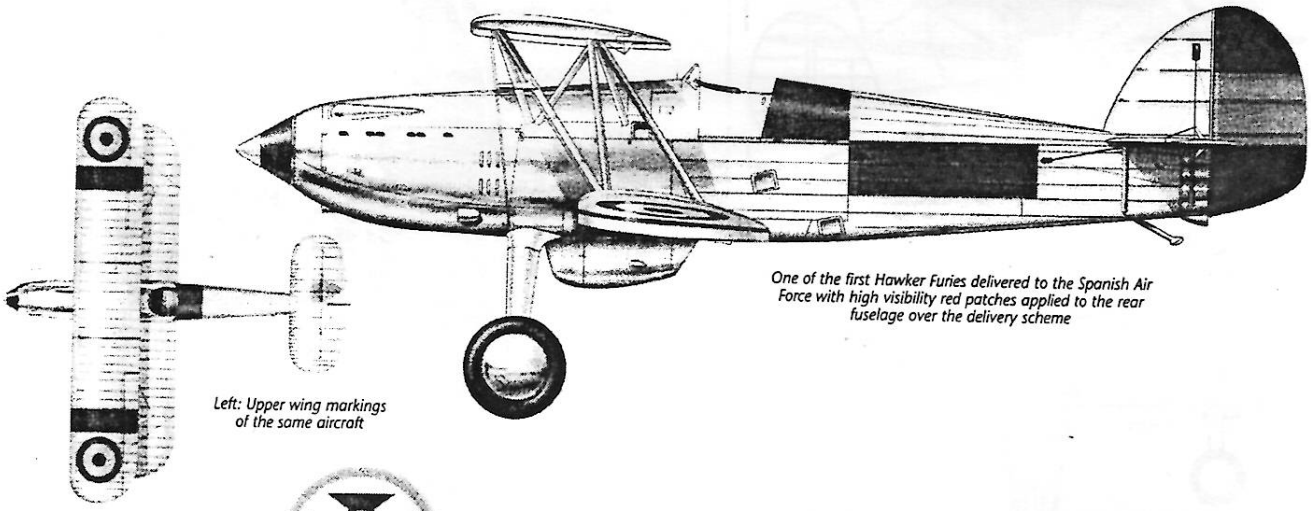

One of the first Hawker Furies delivered to the Spanish Air Force with high visibility red patches applied to the rear fuselage over the delivery scheme

Left: Upper wing markings of the same aircraft

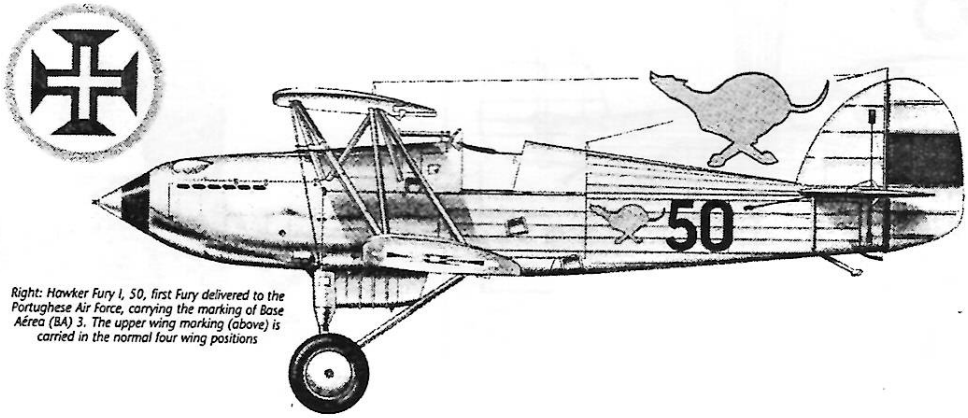

Right: Hawker Fury I, 50, first Fury delivered to the Portughese Air Force, carrying the marking of Base Aérea (BA) 3. The upper wing marking (above) is carried in the normal four wing positions

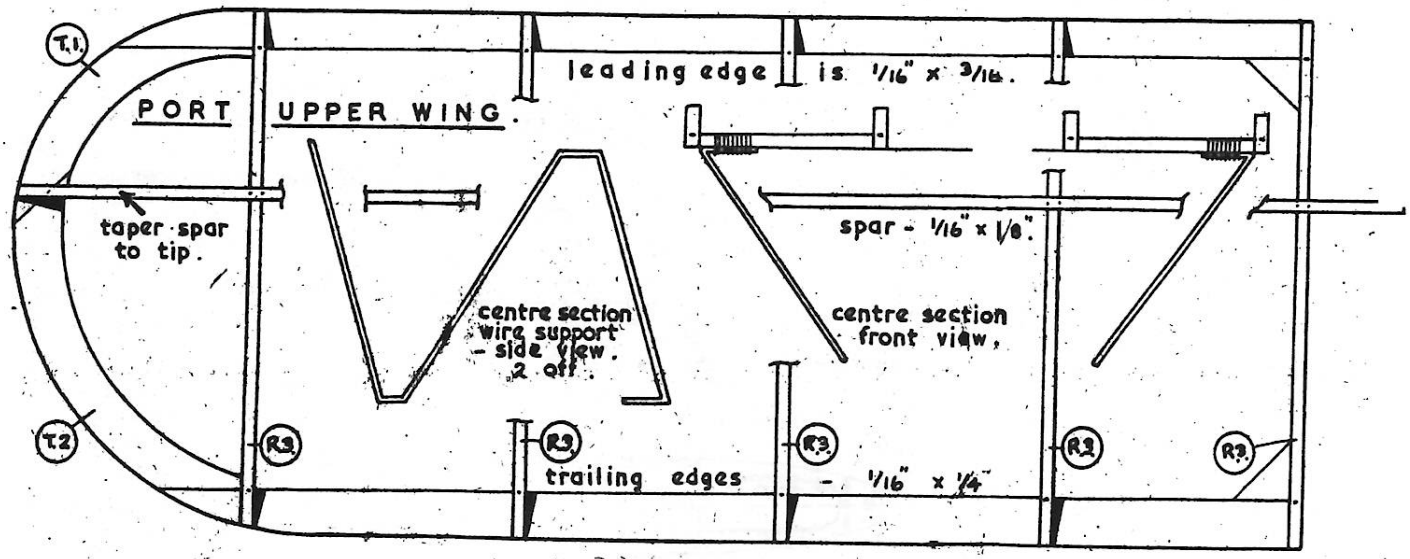
T.1.
PORT UPPER WING.
leading edge is 1/16" x 3/16.
taper spar to tip.
spar - 1/16" x 1/8".
centre section wire support - side view. 2 off.
centre section front view.
T.2
R.2
R.2
R.3
R.2
R.2
trailing edges - 1/16" x 1/4"

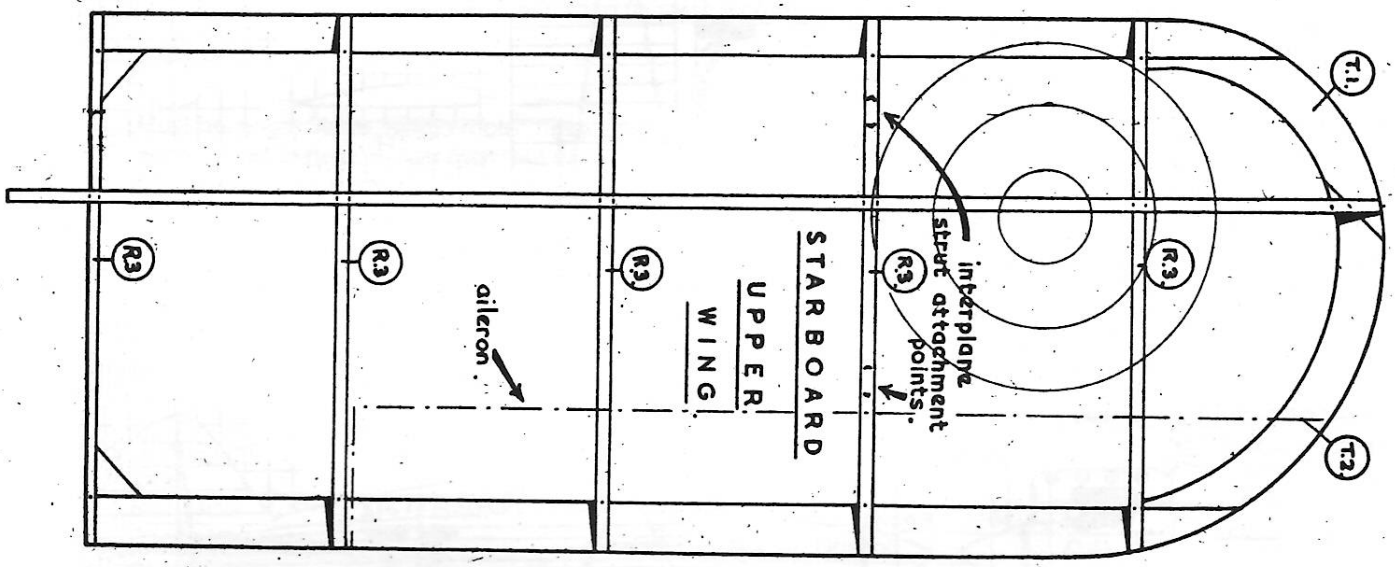
T.1.
R.3
R.3
R.3
R.3
R.3
aileron.
STARBOARD UPPER WING.
interplane strut attachment points.
T.2.

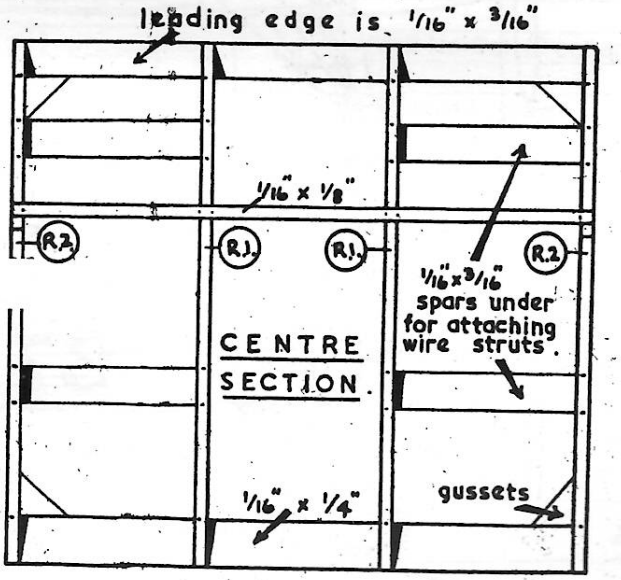
leading edge is 1/16" x 3/16"
1/16" x 1/8"
R.2
R.1.
R.1.
R.2
1/16"x3/16" spars under for attaching wire struts.
CENTRE SECTION.
1/16" x 1/4"
gussets

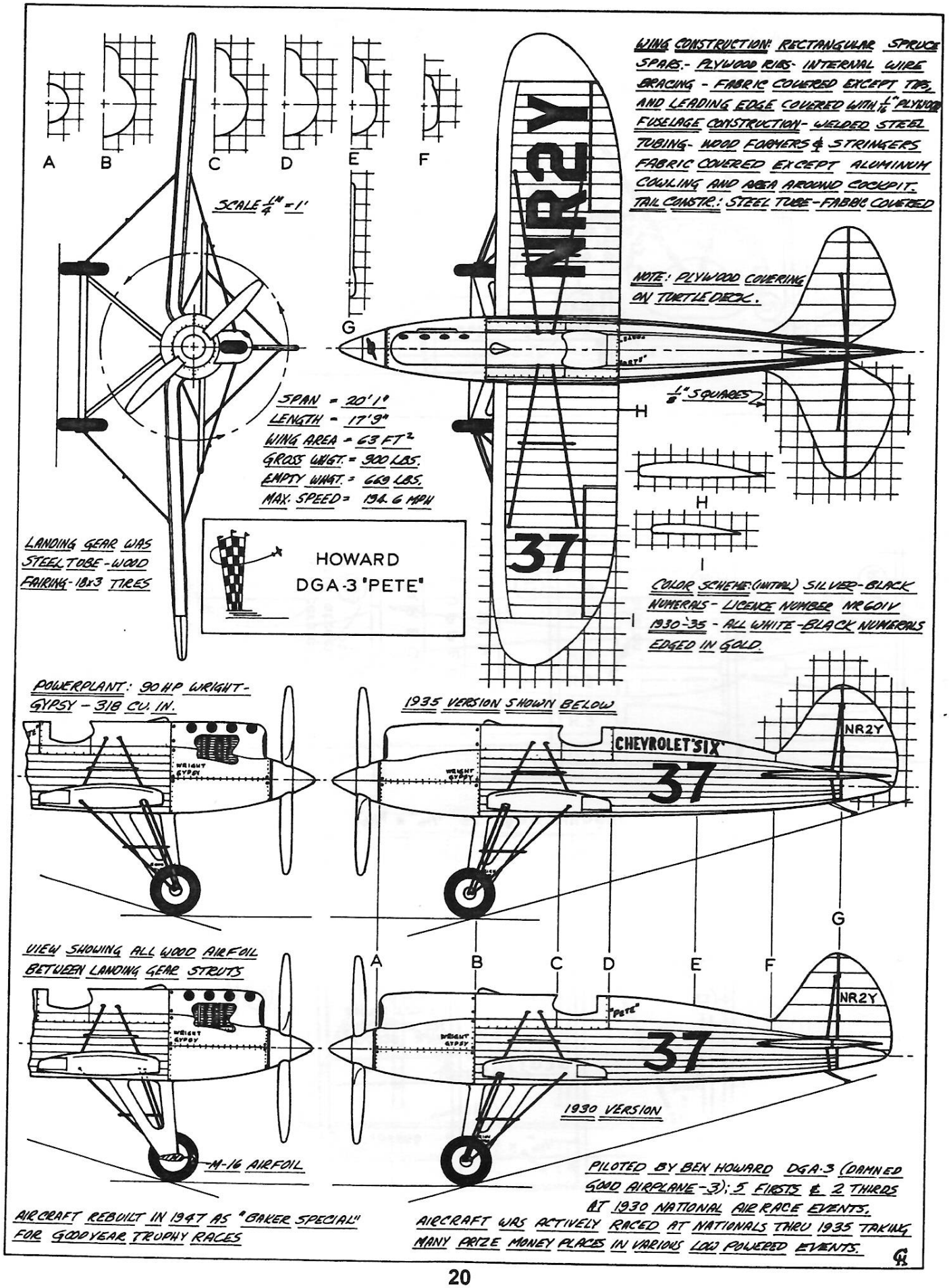
A
B
C
D
E
F
G
H
I
SCALE 1/4" = 1'
WING CONSTRUCTION: RECTANGULAR SPRUCE SPARS.- PLYWOOD RIBS- INTERNAL WIRE BRACING - FABRIC COVERED EXCEPT TIPS, AND LEADING EDGE COVERED WITH 1/16" PLYWOOD
FUSELAGE CONSTRUCTION- WELDED STEEL TUBING- WOOD FORMERS & STRINGERS FABRIC COVERED EXCEPT ALUMINUM COWLING AND AREA AROUND COCKPIT.
TAIL CONSTR.: STEEL TUBE-FABRIC COVERED
NOTE: PLYWOOD COVERING ON TURTLE DECK.
SPAN = 20'1"
LENGTH = 17'9"
WING AREA = 63 FT²
GROSS WGT. = 900 LBS.
EMPTY WGT. = 660 LBS.
MAX. SPEED = 194.6 MPH
1/8" SQUARES
LANDING GEAR WAS STEEL TUBE-WOOD FAIRING-18x3 TIRES
HOWARD
DGA-3 "PETE"
NR2Y
37
COLOR SCHEME: (INITIAL) SILVER-BLACK NUMERALS - LICENCE NUMBER NR 601V
1930-'35 - ALL WHITE -BLACK NUMERALS EDGED IN GOLD.
POWERPLANT: 90 HP WRIGHT-GYPSY - 318 CU. IN.
1935 VERSION SHOWN BELOW
CHEVROLET SIX
WRIGHT GYPSY
VIEW SHOWING ALL WOOD AIRFOIL BETWEEN LANDING GEAR STRUTS
"PETE"
1930 VERSION
M-16 AIRFOIL
PILOTED BY BEN HOWARD DGA-3 (DAMNED GOOD AIRPLANE-3); 5 FIRSTS & 2 THIRDS AT 1930 NATIONAL AIR RACE EVENTS.
AIRCRAFT REBUILT IN 1947 AS "BAKER SPECIAL" FOR GOODYEAR TROPHY RACES
AIRCRAFT WAS ACTIVELY RACED AT NATIONALS THRU 1935 TAKING MANY PRIZE MONEY PLACES IN VARIOUS LOW POWERED EVENTS.

National Building Museum (NBM) – November 21, 2004

Our first NBM Funfly for this season attracted 18 entrants. Please note the dates for the future funflys and Delta Dart sessions on the front cover. Some of the dates have been changed from those previously announced.

New rules for Phantom Flash:

1. Must use unmodified, one piece, molded plastic prop not to exceed six (6) inches. Clay may be used to balance prop.
2. Six (6) gram minimum weight for airframe without rubber motor.

New Event

There will be a new mass launch event for the January 30, 2005, Funfly – single blade helicopters. Bill Hannan designed several of these in the 1970's and a copy of his plan and article for the "Upshot" can be downloaded from the Maxecuter web site (http://www.his.com/~tschmitt/NBM/NBMcontest.html).

Single Blade Helicopter Rules:

1. Must be single blade, single motor helicopter similar to the Bill Hannan designs. Contestants are encouraged to design their own, but they must look like a real helicopter in profile.
2. Motor stick cannot exceed eight (8) inches.
3. Single blade cannot exceed six (6) inches from center of hub to tip of blade.
4. Two motor helicopters okay if based on real helicopters such as the Boeing Vertol CH-46 or Piasecki "Flying Banana". Each motor must meet blade and motor stick rules.

NBM Results – November 21, 2004

14g. Bostonian (7 entrants)		
1	Rich Gillis	Swift
2	Randy Kleinert	?
3	Stew Meters	?

P-Nut Scale (8 entrants)		
1	Steve Fujikawa	Lacey
2	Dan Driscoll	O-H 7
3	Mike Moscow	Hosler Fury

Phantom Flash (9 entrants)		
1	Steve Fujikawa	
2	Paul Spreiregen	
3	Glen Simpers	

WW II No-Cal (9 entrants)		
1	Steve Fujikawa	P-39
2	Dave Mitchell	Typhoon
3	Bob Marchese	Tony

Dime Scale (4 entrants)		
1	Frank Rowsome	Ong
2	Dave Mitchell	Cessna AW
3	Dan Driscoll	Robin

Penny Plane (3 entrants)		
1	John Appling	4:30
2	Frank Rowsome	4:15
3	John Zseleczky	3:07

Ready-to-Fly (5 entrants)		
1	Terry Slattery	Firefly (2:44)
2	Al DeRenzis	Firefly (2:35)
3	Sharon Appling	Firefly (2:25)

Grand Champion
Steve Fujikawa

Albert G. Phillips

1928 - 2004

The Maxecuters lost one of our long time members with the passing of Bert Phillips on October 25, 2004, from complications following surgery. Bert had been one of our most active members and was our long time club secretary. He was also one of the stalwart crew putting out MaxFax.

Albert G. Philips was born in Philadelphia and grew up in southern New Jersey. He graduated from Clark University in Massachusetts and spent most of his working career with Aetna Life and Casualty in various locations in the east.

In addition to his interest in all things aviation, Bert was a lifelong automobile enthusiast. He and his buddies were active in Sports Car Club of America (SCCA) competition in the 1960's and early 1970's. Over the years, they campaigned several Porches, a Siata, and a Formula V. Bert commented that they were never really competitive, but they sure had fun.

Bert was also a serious bicycle rider, and up to his final year, usually rode in excess of 1,000 miles a year.

Bert began building models as a teenager and after several lapses for family, career, auto racing, and bicycling, he got back to it when he joined the Maxecuters in 1984. As with auto racing, he didn't care if his models were competitive as long as he was having fun. He often said that he really didn't go to contests to compete, but to participate. He had a great attitude, and no matter how bad the weather or how bad his models might be performing, he would flash a big smile and say, "It beats working."

We will greatly miss his presence and wry sense of humor at our meetings and on the flying field.

Bert's wife, Barbara, died in 1992. He is survived by three daughters: Elizabeth, Kathryn, and Evelyn and seven grandchildren. He also leaves his good friend and bicycling companion, Lee Fisher.

A memorial service was held in Bowie, MD, and Bert was laid to rest next to his wife in Maine.

On the back page:
Bert is shown with a variety of his models. He was especially proud of his Stinson Tri-motor although he was never able to get it properly powered and trimmed out. One photo shows Bert, at speed, in his racing team's Formula V. Another photo captures Bert's indomitable irreverent attitude. That red Bellanca was a little the worst for ware, as was Bert, but hey, it kept on flying just like Bert. And last but not least his FAC Kanone!

Edward J. Zapolski, Ph.D.

1931 - 2004

Ed Zapolski, one of our more active members, died from colon cancer on November 9, 2004. Ed had been flying with us for about the last five years was a regular at all Maxecuter events.

Edward J. Zapolski was born in Brooklyn, NY, and grew up in Queens. Enlistment in the Air Force during the Korean War brought him to Bolling Field in Washington, DC. Ed loved DC and after his enlistment, attended George Washington University and eventually earned a Ph.D. in Physiology from Georgetown University.

He spent 20 years as an assistant and then associate professor at the Georgetown School of Medicine. He loved working in a laboratory; his field of research was mainly in iron metabolism He then moved to the National Science Foundation and the National Institutes of Health where he retired in 1996.

Ed was an accomplished abstract metal sculptor and won several local art contests and sold many pieces to private collectors. Two pieces were publicly displayed.

Ed was a lifelong model airplane builder. While in the Air Force he was sent to Texas to compete in a Air Force model plane contest and won first prize. After stops for family and career, returned to model building in retirement. Often with his son, Steve, he was a consistent participant in local events and our Delta Dart program at NBM. He liked to design his own, and his Bostonian Fairchild appeared in the July/August 2003 MaxFax. A photo of Ed appeared on the front page of the Washington Post when the paper did a story on a Maxecuter NBM event.

Ed was always ready with a wisecrack or to give someone a good-natured hard time. He was also generous with his help for fellow modelers. He will be missed.

It was the Maxecuter's sad privilege to act as the Pall Bearers at Ed's funeral.

His wife Arlene, son, Steve, and daughters, Lisa and Susan survive Ed.

On the opposite page:
Ed was a prolific builder, he usually showed up with a new model at every meeting. The first photo shows the *Canary* that we had proposed as a single design model for the NBM. Several of us built it , but Ed was the only one of us to get it to fly decently. Another photo shows the Bostonian Fairchild that ran in MaxFax. That profile Defiant was one of many that gave the rest of us real competition at indoor flying sessions.

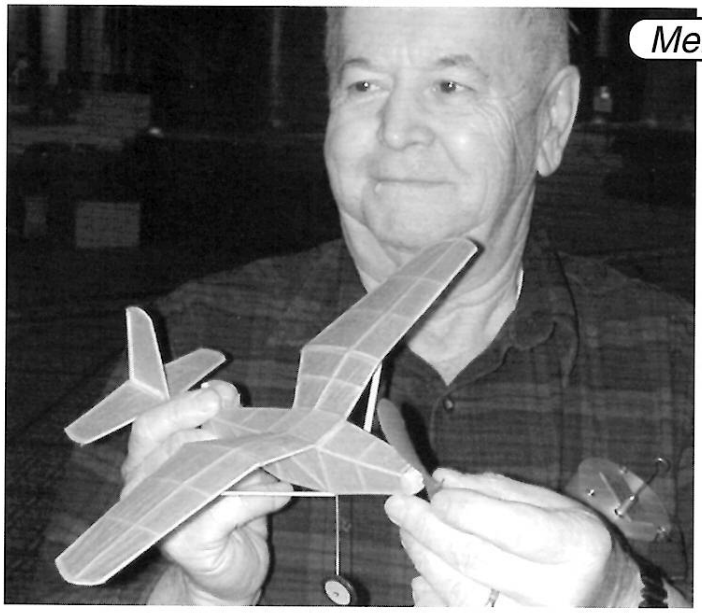

Memories of Ed Zapolski

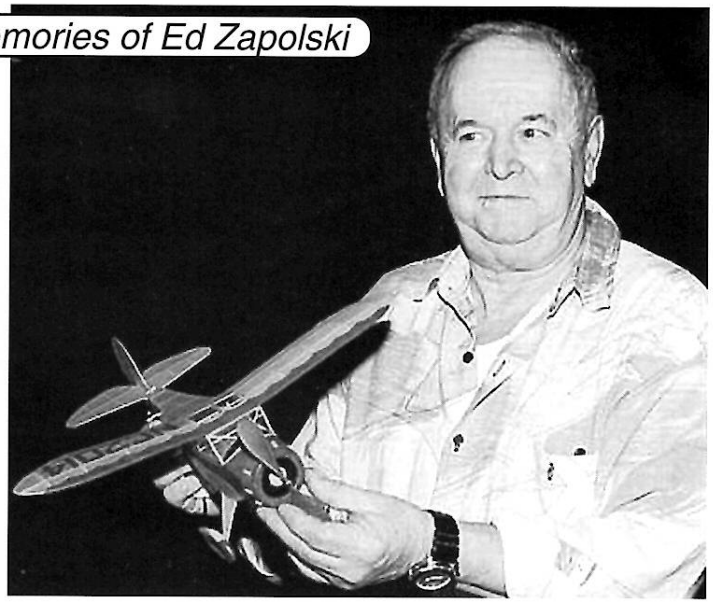

Ed with his son Steve

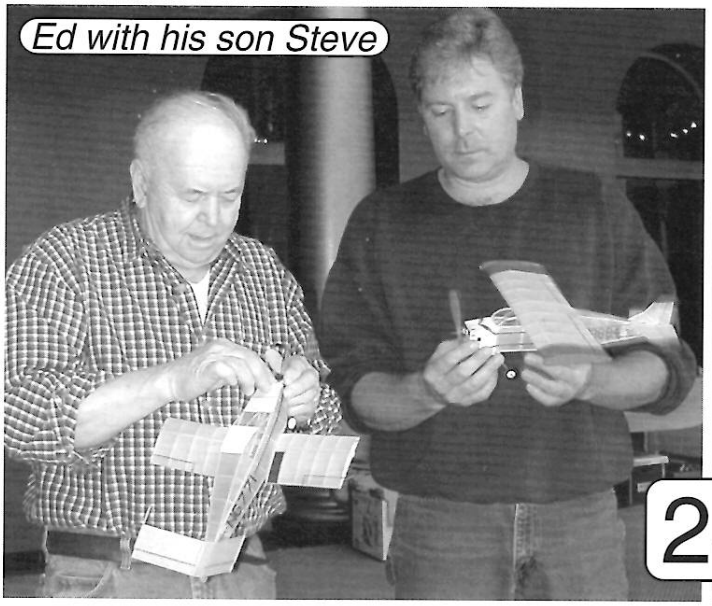

Memories of our Secretary Bert Phillips

CLUB OFFICERS -President: Hurst Bowers, 1649 Birch Rd.. Mclean, VA 22101
Secretary: David Mitchell 230 Walnut St. NW., Washington, DC 20012
Treasurer: Norm Davison, 14008 Castaway Dr., Rockville, MD 20853 Email --- nordav@juno.com
Editor: Stew Meyers, 8304 Whitman Dr., Bethesda, MD 20817

MEETINGS - The D.C. MAXECUTERS hold meetings at 8:00 pm on the first Tuesday of every month at the College Park Airport, the oldest continuously operating airport in the world.

MEMBERSHIP - Dues for membership in the D.C. MAXECUTERS are $15 per year for residents of the USA, Canada, and Mexico, and $25 for all other countries.

Your mailing label indicates the year and month of the last issue of your current membership. A red "X" in the box below is a reminder that your dues are due. Send a check, payable to the"D.C. MAXECUTERS", to the treasurer, Norm Davison.

PUBLISHING DATES - Six issues of MaxFax are sent each year as close to the nominal dates as possible, but since this is a volunteer publication nothing is guaranteed except that six issues will be sent to all members.

CONTACTS - Material for the newsletter and membership questions should be addressed to Stew Meyers phone 301-365-1749. Email gets immediate attention. *stew.meyers@erols.com*

Maxecuter web site: http://www.his.com/~tschmitt/

Your DUES are due

BEN HOWARD'S "PETE"
1930'S RACER
PEANUT SCALE 13"

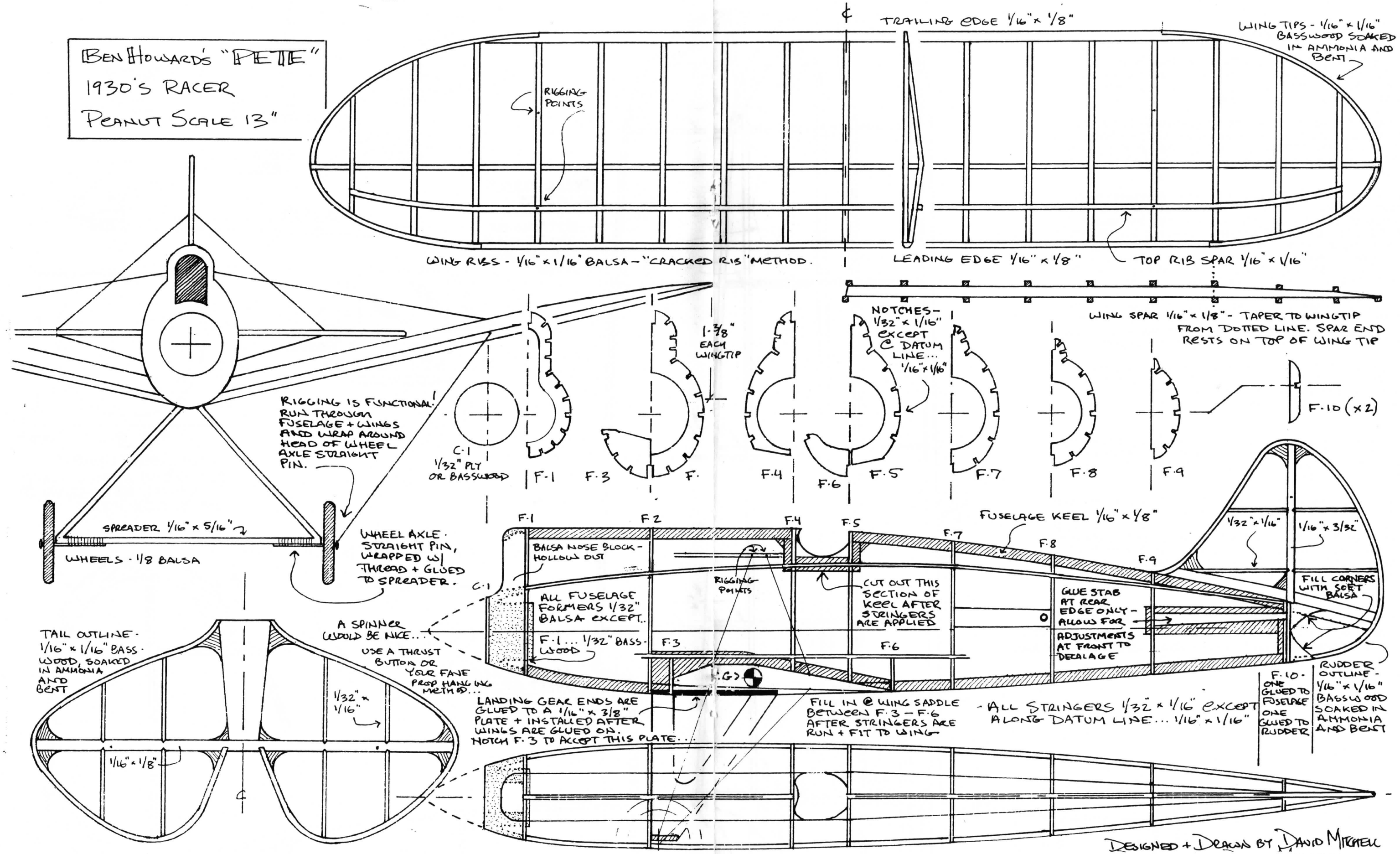

JAPANESE KAWASKI FIGHTER

Study carefully all details and observe all notations on plans before starting to build your plane. Follow instructions step by step, refer constantly to drawings and photo, and check parts carefully with plans from time to time.

When cutting curved balsa parts such as bulkheads, wing tips, tail surface outlines, etc., always cut the inside curve first, as this helps to prevent the balsa from splitting. When pinning parts to the drawing, never pin through the wood but place pins on each side.

Fuselage: Place top and bottom longerons on drawing (solid black lines) holding in place with straight pins. Insert vertical pieces (solid black lines). When dry, glue in top bulkheads 6, 7, 8, 9, and front bulkhead A. Cement all parts securely. Glue on cockpit (fig. 3) and insert rear hook for rubber. Cover body with green tissue, using banana oil as an adhesive. Two blue circles are glued to each side of fuselage. Cut out motor front from 2 pieces 3/16" balsa printed sheet. Shape and glue in position.

Wings & Tail Surfaces: Build tail surfaces on drawing to insure proper shape. Build wings cover with blue tissue. Two green circles are glued to top and bottom of wings. Rudder is covered with blue tissue, remainder of tail surfaces with green tissue.

Propeller: The propeller supplied in the kit is very efficient and durable. Sandpaper propeller smooth. insert propeller shaft in nose plug, then washers, then propeller, and bend to U shape. Apply a little glue on the end, then pull prop shaft back into propeller.

Assembling: Glue tail surfaces to fuselage. Shape landing gear and glue in place. Add center section struts and lower wing. When dry add top wing and outer wing struts. insert propeller and rubber, using two loops of 1/6" flat rubber.

Flying: Hold ship by center of wing tips. In this position the model should balance as in normal flight. If it does not, add weight to front or rear, where necessary. Wind propeller 50 times for a trial flight. If the model nose dives, warp tail surfaces by breathing on them. If it climbs too steeply and then stalls and falls on its tail, warp in opposite direction. By adjusting the tail surfaces correctly the model will fly perfectly.

Well Ok, the blue meat balls are definitely off-scale. Check out a good three view, say Munson. And there is the mystrey stab attach. That aside, this Scientific model has the potential of being a good flyer.

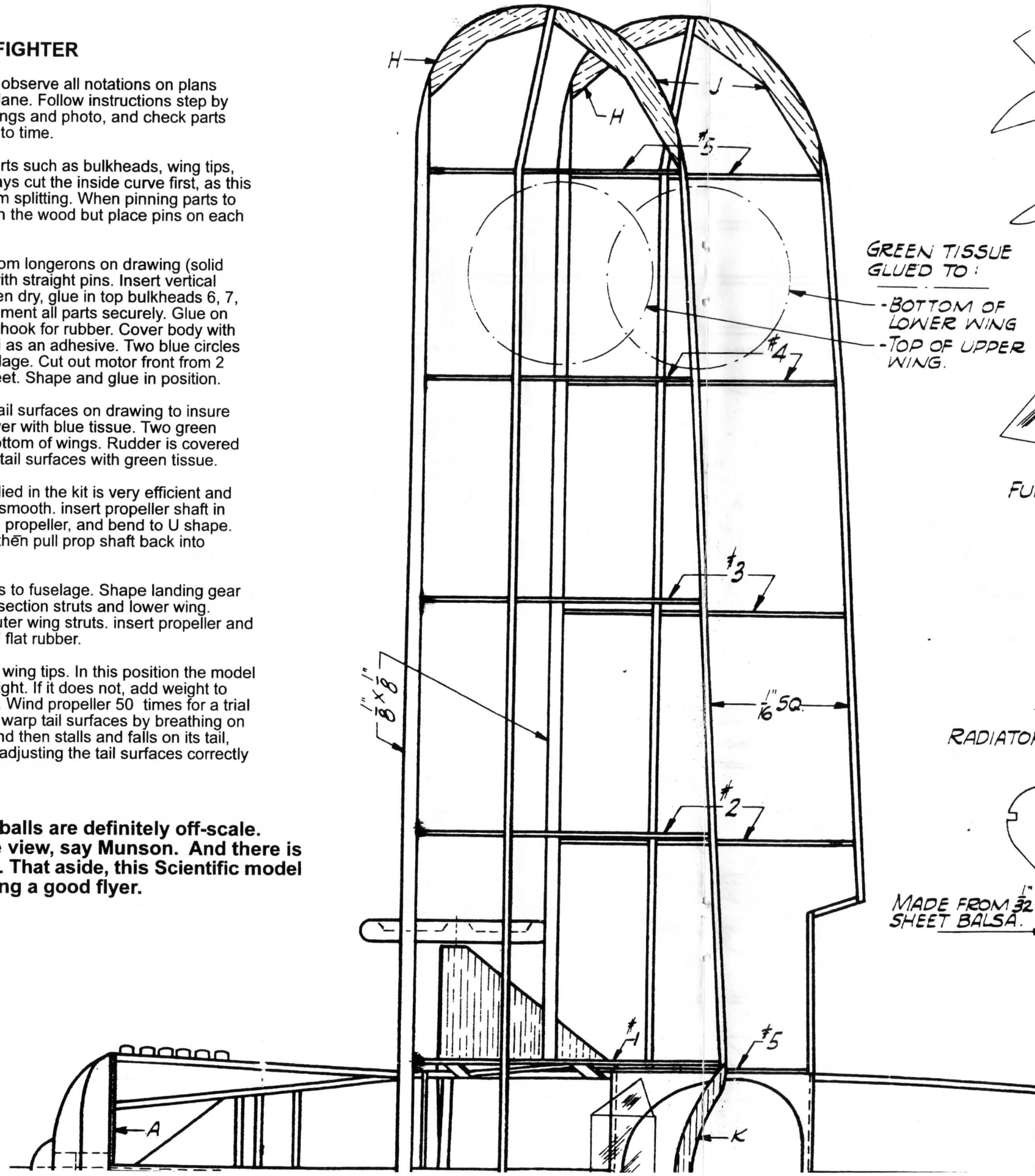

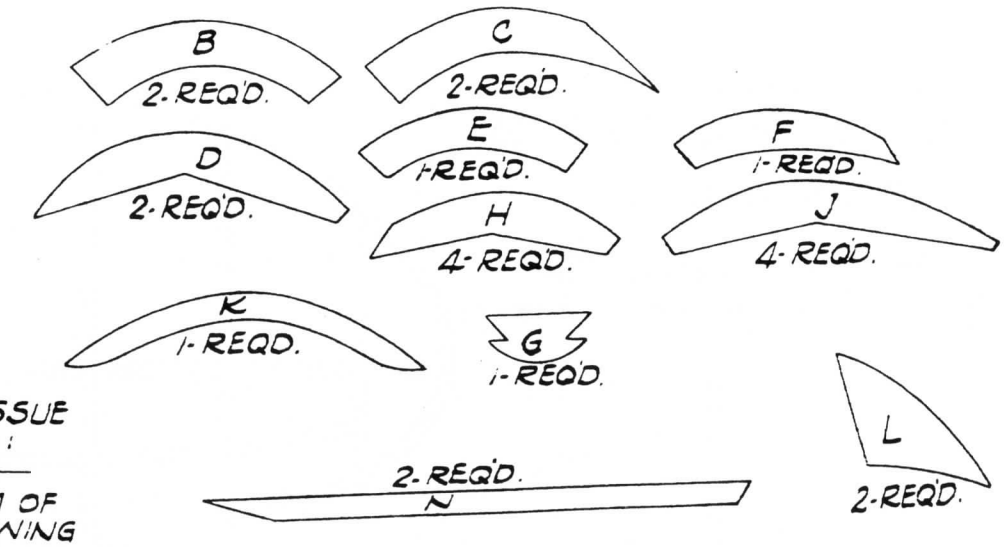

FIG. 4
FULL SIZE CELLULOID WINDSHIELD.

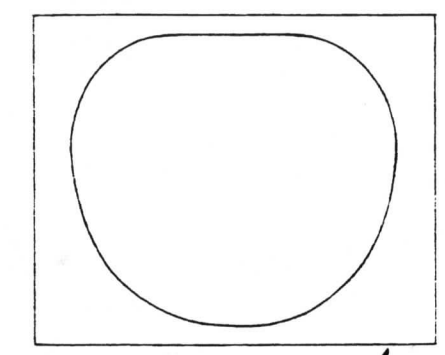

FIG. 3
FULL SIZE COCKPIT CUT FROM PLAN & PLACE ON MODEL AS SHOWN ON TOP & SIDE VIEWS.

FIG. 1
RADIATOR- MADE FROM 1/32" SHEET BALSA.

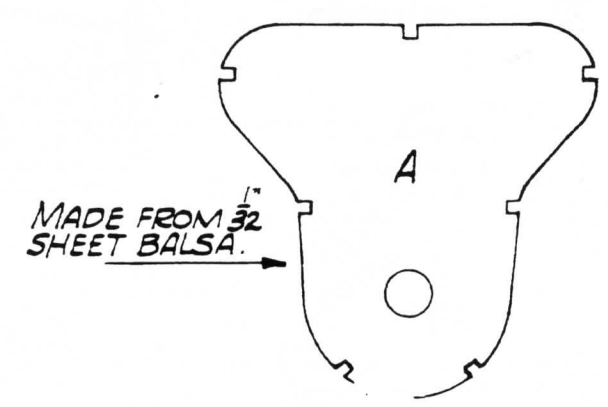

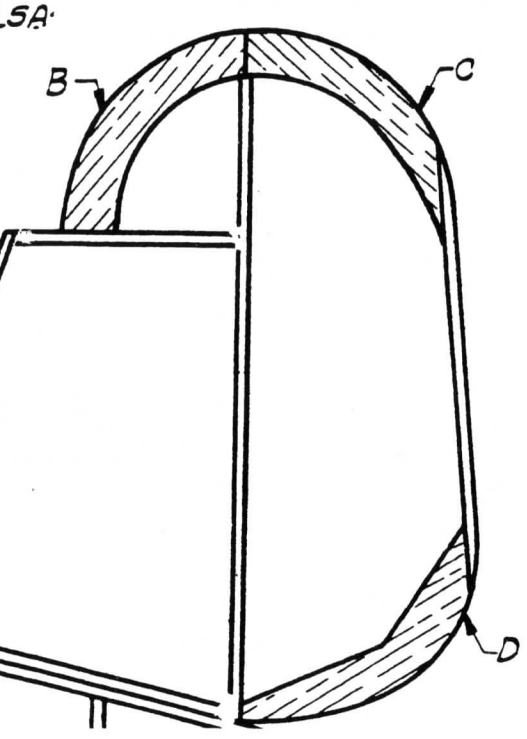

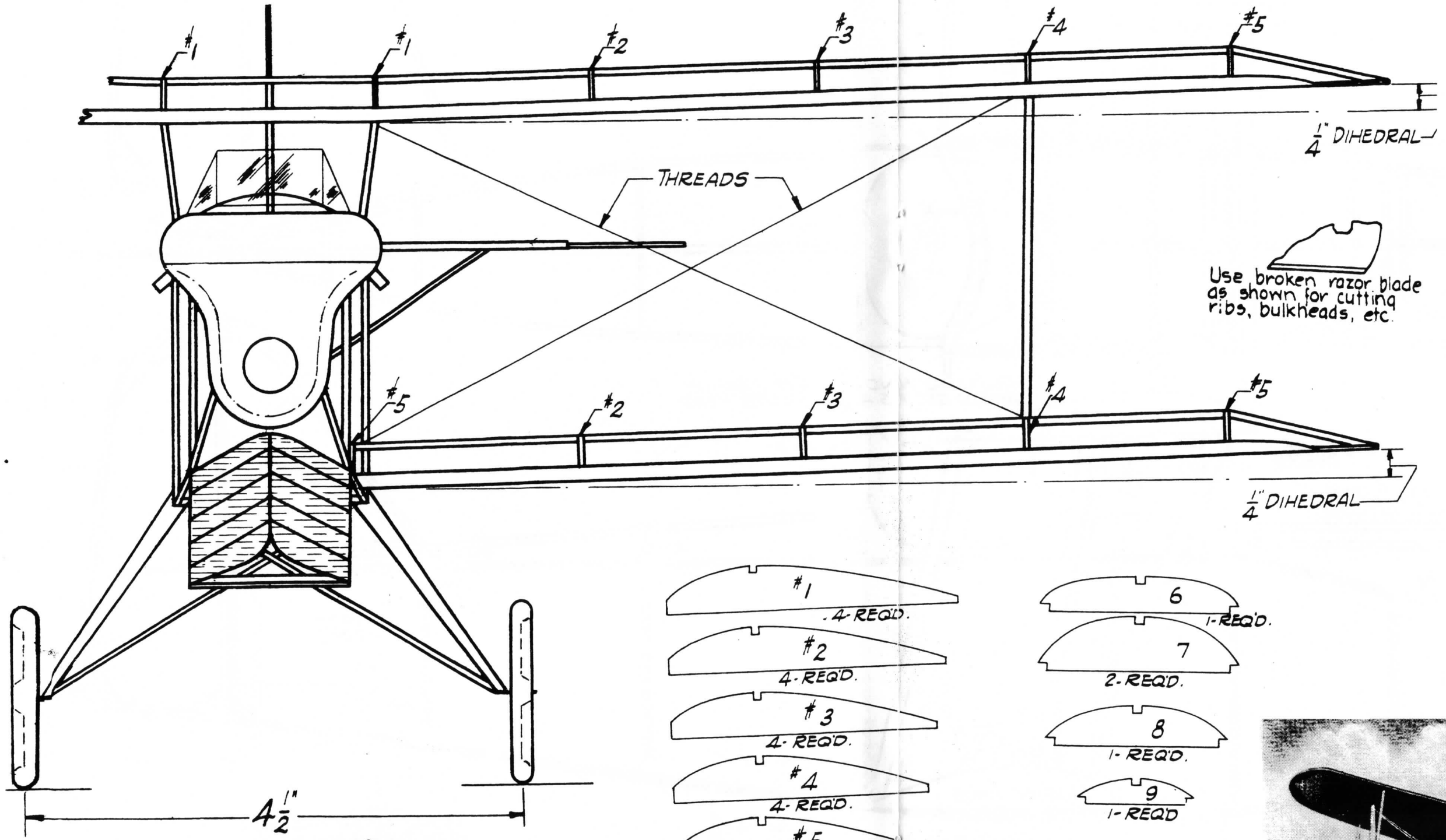

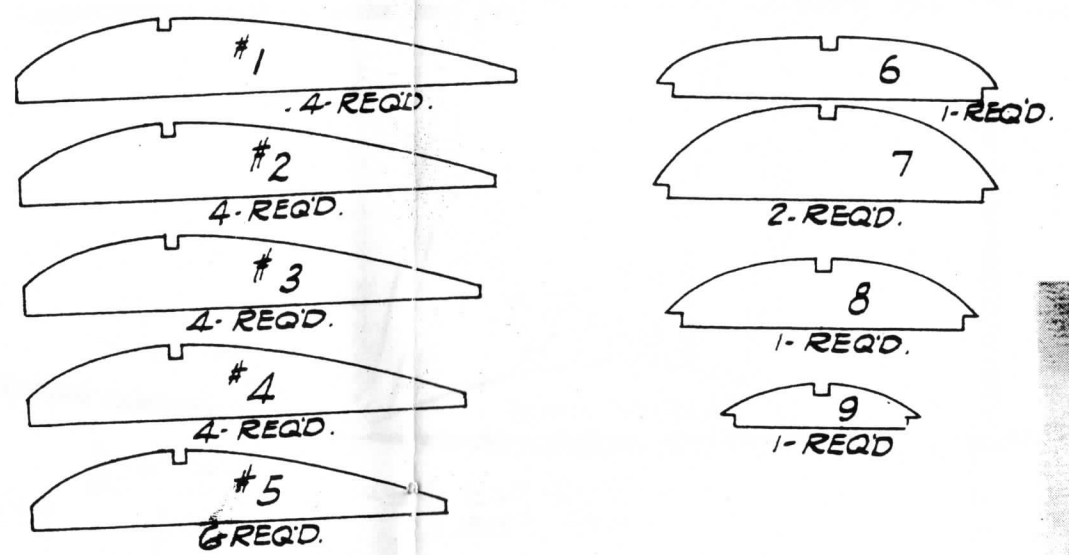

SCIENTIFIC MODEL AIRPLANE Co.

"One of America's Greatest Supply Houses"

NEWARK, N.J.

JAPANESE KAWASKI FIGHTER

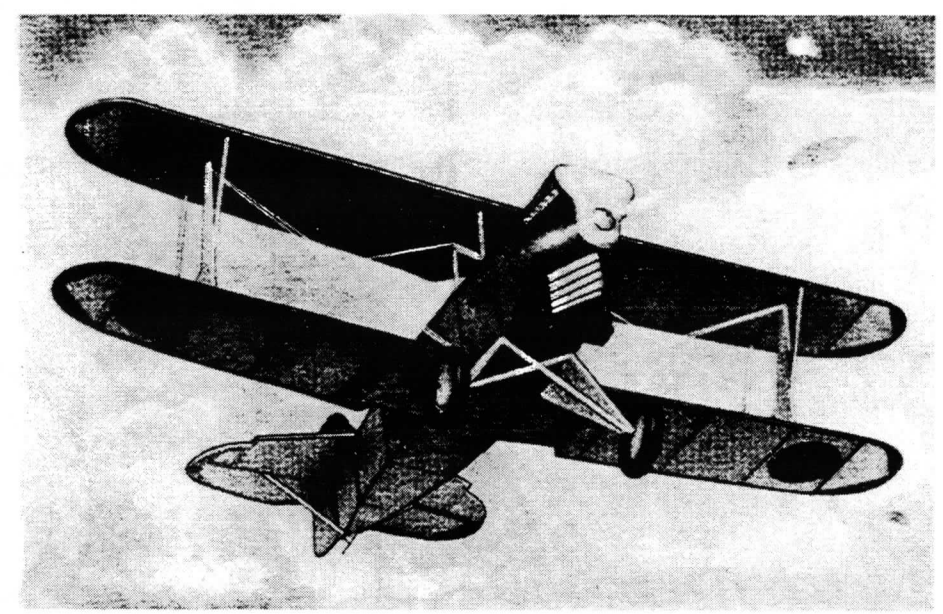

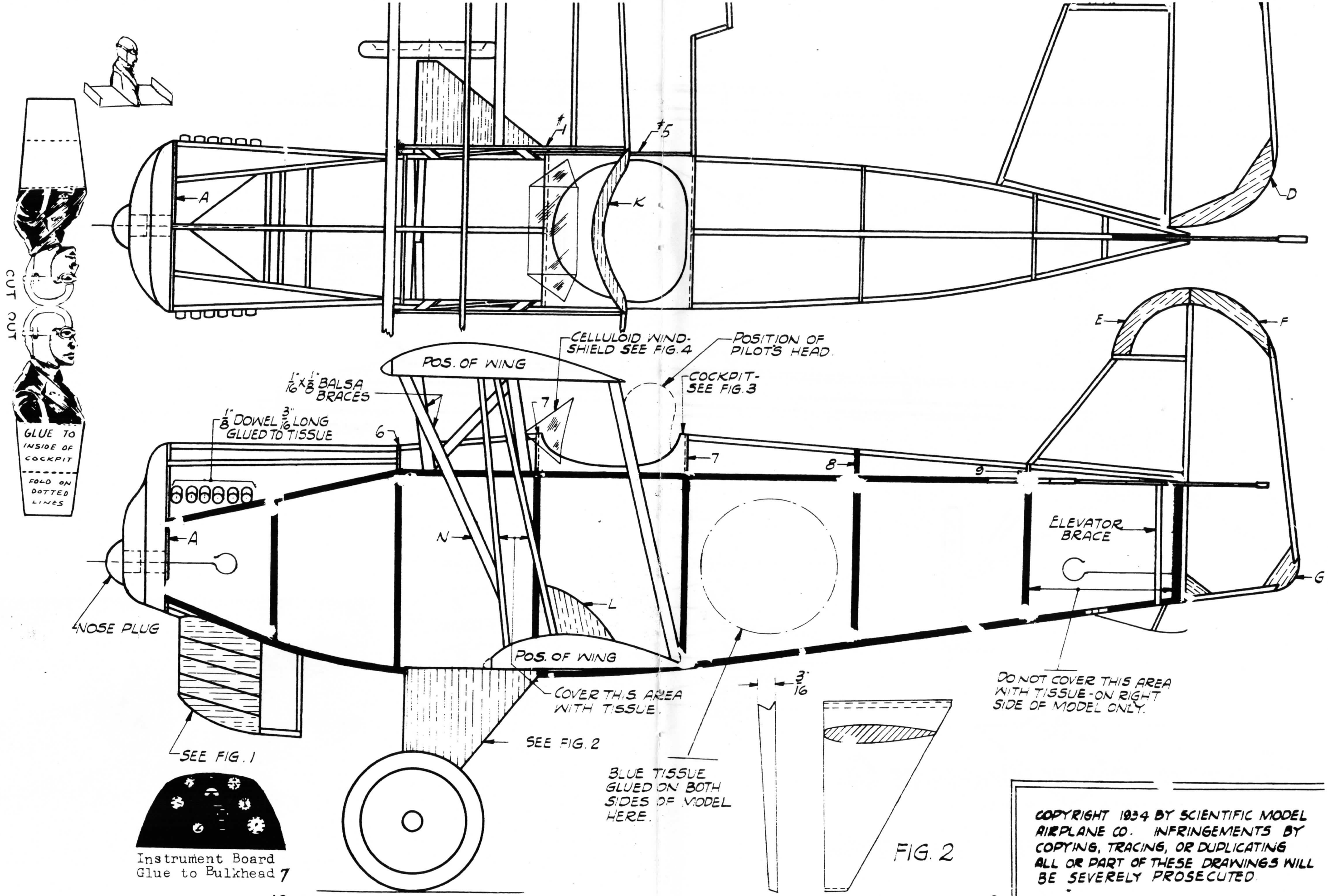

VERON HAWKER FURY MK.I.

BRITISH SINGLE SEAT BI-PLANE FIGHTER OF THE ROYAL AIR FORCE 1930-36.

17" SPAN.

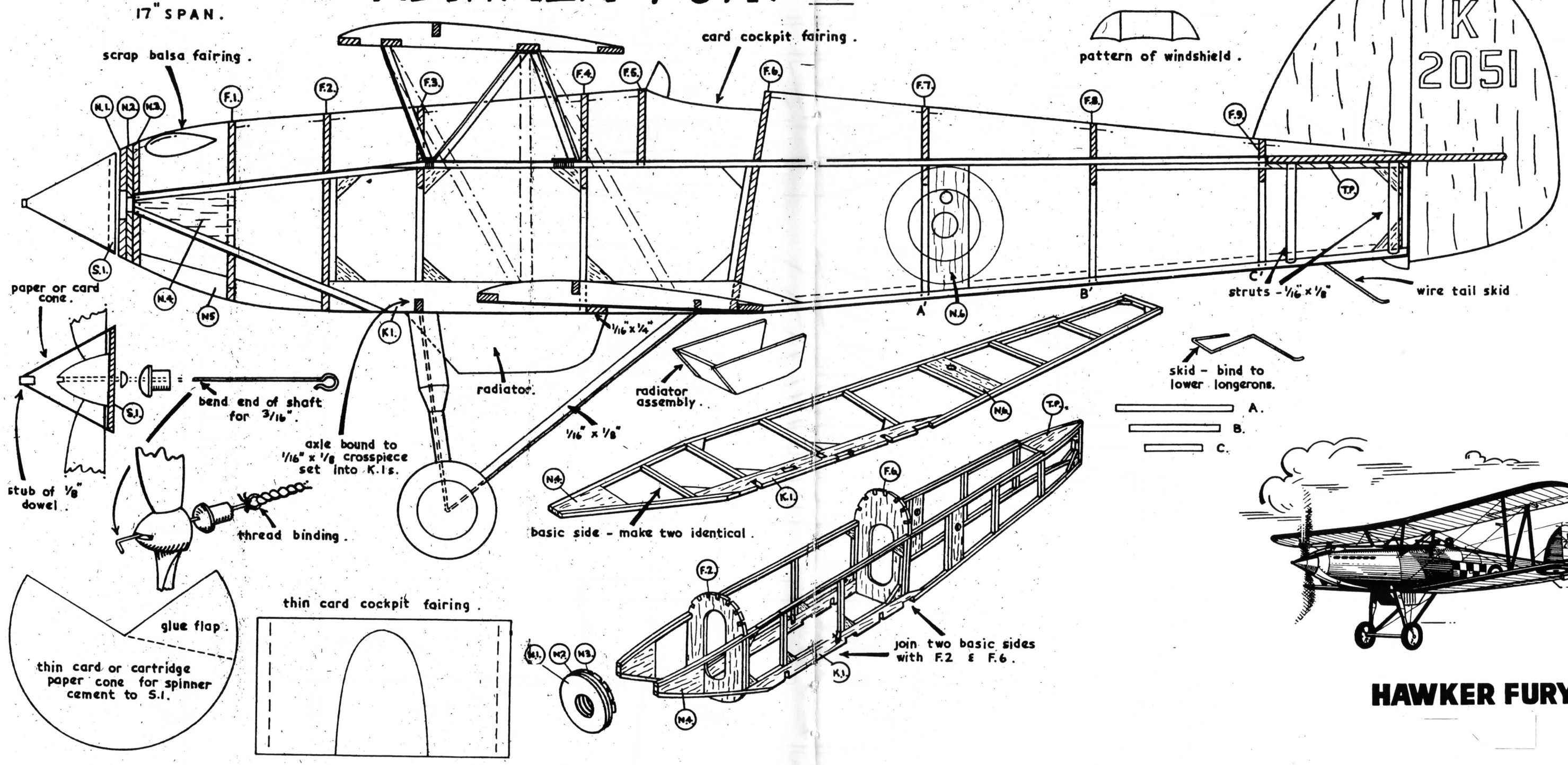

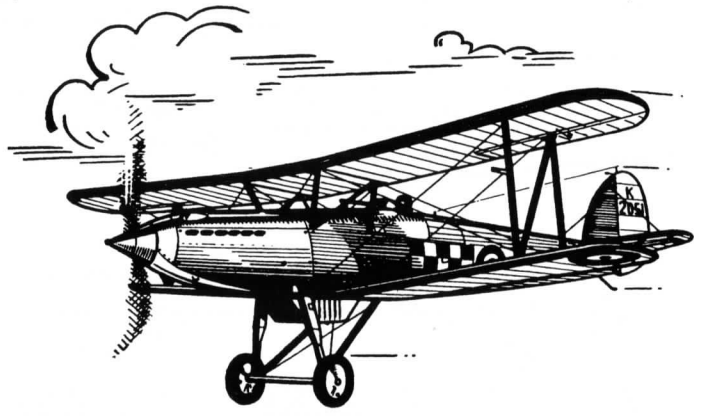

HAWKER FURY

This Veron Kit continues our presentations of these nifty British models designed by Albert Hatfield. We don't have the instuction sheet, but you really don't need it. The pictures sufice. Resist the urge to replace the sheet fin and rudder if you want to fly in the special Veron event next summer at Kudzu. You will probably want to replace the undersized wheels with something more scale. The plans show a proper spinner over the one supplied by Veron. Vernon used one size for all which makes them too small for many models in the series. Check a three-view. Lots of nifty prewar color schemes.

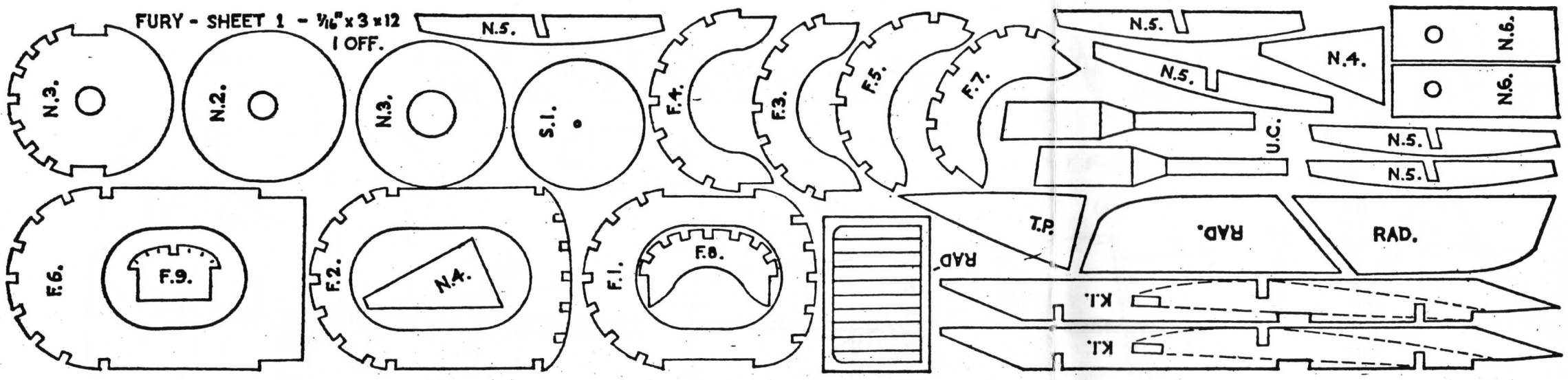
FURY - SHEET 1 - 1/16" x 3 x 12
1 OFF.
N.3.
N.2.
N.3.
S.1.
N.5.
F.4.
F.3.
F.5.
F.7.
N.5.
N.5.
N.4.
N.6.
N.6.
U.C.
N.5.
N.5.
F.6.
F.9.
F.2.
N.4.
F.1.
F.8.
RAD.
T.P.
RAD.
RAD.
K.1.
K.1.

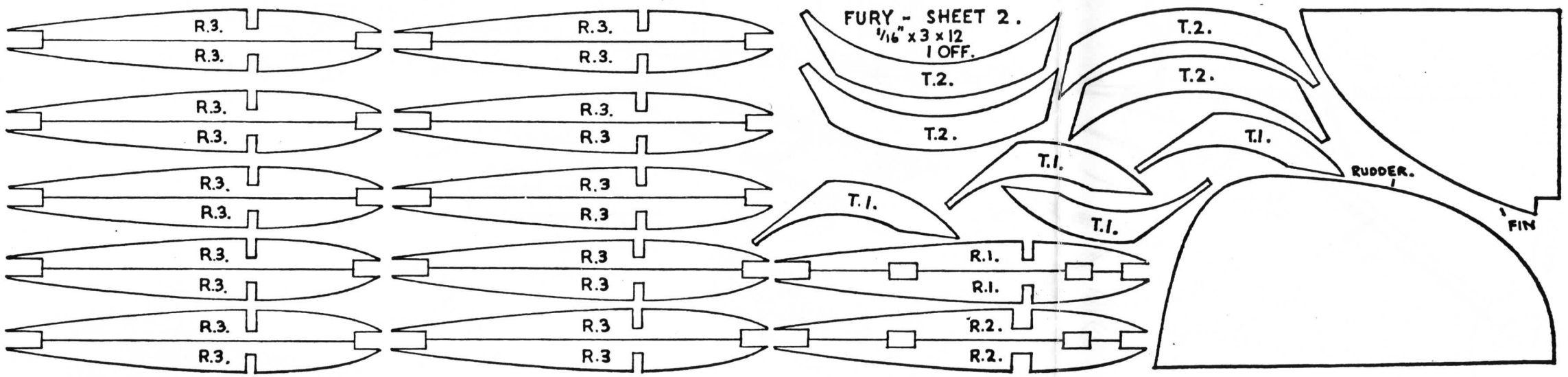
R.3.
R.3.
R.3.
R.3.
R.3.
R.3.
R.3.
R.3.
R.3.
R.3.
R.3.
R.3.
R.3.
R.3.
R.3.
R.3.
R.3.
R.3.
R.3.
R.3.
FURY - SHEET 2.
1/16" x 3 x 12
1 OFF.
T.2.
T.2.
T.2.
T.2.
T.2.
T.1.
T.1.
T.1.
T.1.
RUDDER.
FIN
R.1.
R.1.
R.2.
R.2.

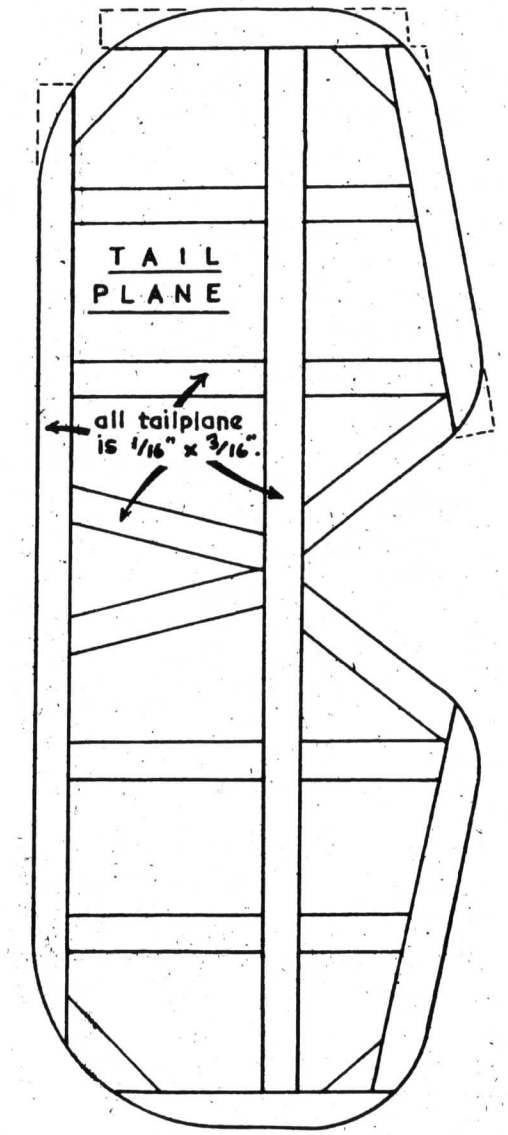
TAIL
PLANE
all tailplane
is 1/16" x 3/16".

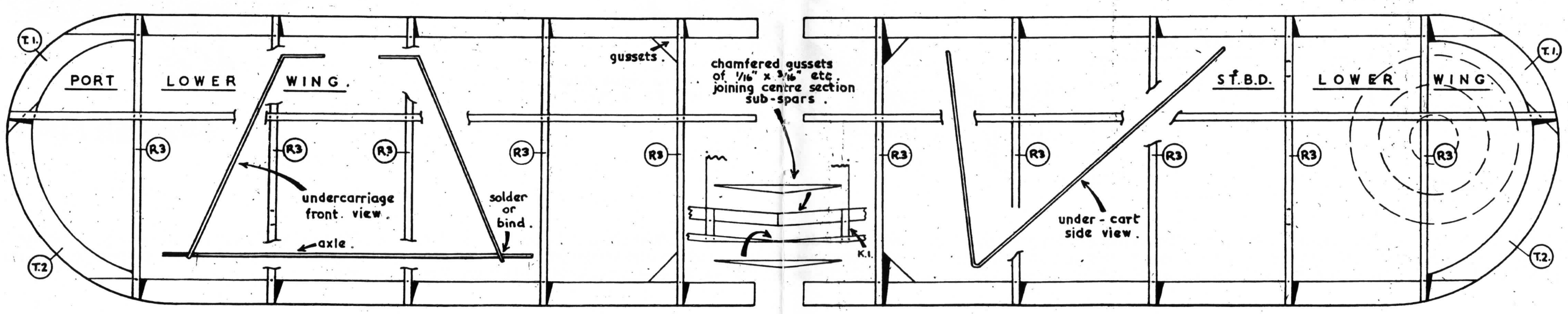
T.1.
PORT
LOWER
WING.
gussets.
chamfered gussets
of 1/16" x 3/16" etc.
joining centre section
sub-spars.
STBD.
LOWER
WING.
T.1.
R.3
R.3
R.3
R.3
R.3
R.3
R.3
R.3
R.3
undercarriage
front view.
solder
or
bind.
axle.
K.1.
under-cart
side view.
T.2
T.2.